IN-BENCH PITCHER RINSER INSTALLATION INTRUCTIONS

Preparing Bench for Installing Main Body

- Remove rinser from packaging and measure the physical unit prior to cutting bench (see image #1)
- Measure to the external edge of the mounting tabs. Leave 3mm gap to allow for the mounting clips to locate correctly between the bench and mounting tabs (see Note #1)
- Ensure appropriate angles have been measured to allow for the curved corners (see Note #2)
- Cut hole in bench/counter top and place rinser into position
- Secure Rinser to the bench by installing mounting clips (a) to all mounting tabs (b) and tighten as required (see image #2)

Note: Do not cut out bench top surfaces prior to receiving your rinser: Due to slight variations in manufacturing design and the varying requirements of bench materials, it is strongly recommended to have the physical vessel rinser on-hand prior to cutting into bench top surfaces. Rhino Coffee Gear does not take responsibility for errors concerning installation and provides the sizes and dimensions as a layout guide only.

Image #1

Note #1: Measure distance from outer edge of rinser to the external edge of mounting clip (leaving a 3mm gap.)

Note #2: Allow for curved edges when measuring out corners

Image #2

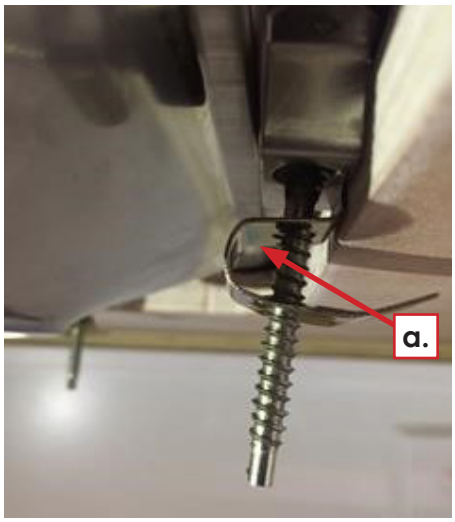

IN-BENCH PITCHER RINSER INSTALLATION INTRUCTIONS

Connecting the Drain

- Remove the centre screw
- Identify the top-side and underside of the drain (see image #4)
  *Note: ensure the black gasket is installed on the underside of the rinser (see image #5)*Locate the top section of
- the drain into position and insert screw
  From the underside of the rinser, position bottom section of drain (image #7), tighten screw to secure.

Image #4

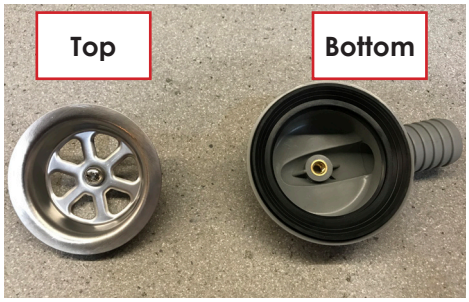

Image #5

Image #6

Image #7

Connecting Drain Hose

- Place hose clamp (a) over drain tube (b)
- Push drain hose (b) over the drain barb(c)
- Tighten hose clamp (a) to secure (*see Image #8*)
- Run drain hose to appropriate drainage point
  Note: always test drain is working properly and there is no leaks at points of connection or in hose prior to first use.

Image #8

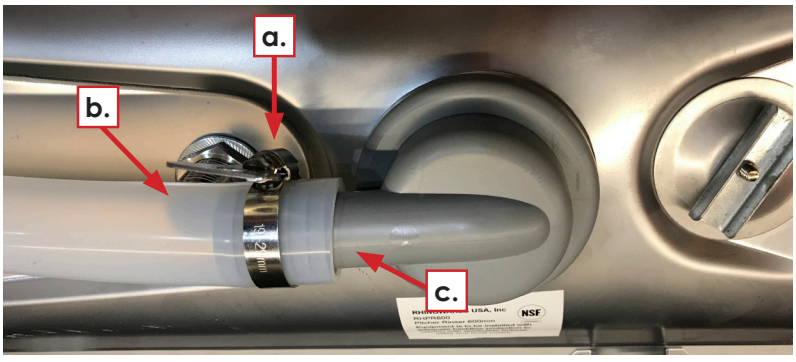

IN-BENCH PITCHER RINSER INSTALLATION INTRUCTIONS

Connecting Water Supply

Equipment is to be installed with adequate backflow protection to comply with applicable federal, state and local codes.

- Cold water connection only.
- Operating Pressure Range should be limited to 350 KPA or 35PSI

Push Fit Connection

- Fasten push-fit connection to the bottom of the spray mechanism. (See image #9).
  Note: Rhino Coffee Gear also supplies an elbow connection that can be added if install requires water line to be brought in on a 90° angle.

- Connect poly tube to the spray mechanism (see image #10)

- Connect other end of hose to the water inlet

Image #9

Image #10

Spray Mechanism

- Unscrew locking nut (c) from main assembly body

- Locate main body of spray mechanism into position from the top side of the rinser

- From the underside of the rinser secure mechanism to the rinser by tightening the locking nut (c) (ensure that enough pressure has been applied to the rubber o-ring to create a water tight seal)

To attach the actuator plate to the spray mechanism

Unscrew the Sprayer cap (a.) from the Spray Nozzle (b.)

- Place Actuator plate over the top of the Spray Nozzle (b.)

- Secure Actuator plate to Spray Mechanism by screwing the Sprayer Cap (a.) onto Spray Nozzle (b.)

IN-BENCH PITCHER RINSER INSTALLATION INTRUCTIONS

Final Check/ Overview

- Check that all connections for water supply and drain have been connected correctly
- Turn on water supply, check that all connections are secure and there are no leaks
- Place vessel over the spray mechanism
- Depress mechanism to test water flow

Note: If any of the connections leak during testing, ensure fittings are all tight and thread tape has been applied correctly.

IN-BENCH PITCHER RINSER INSTALLATION INTRUCTIONS

RHPR600
600mm In Bench Pitcher Rinser

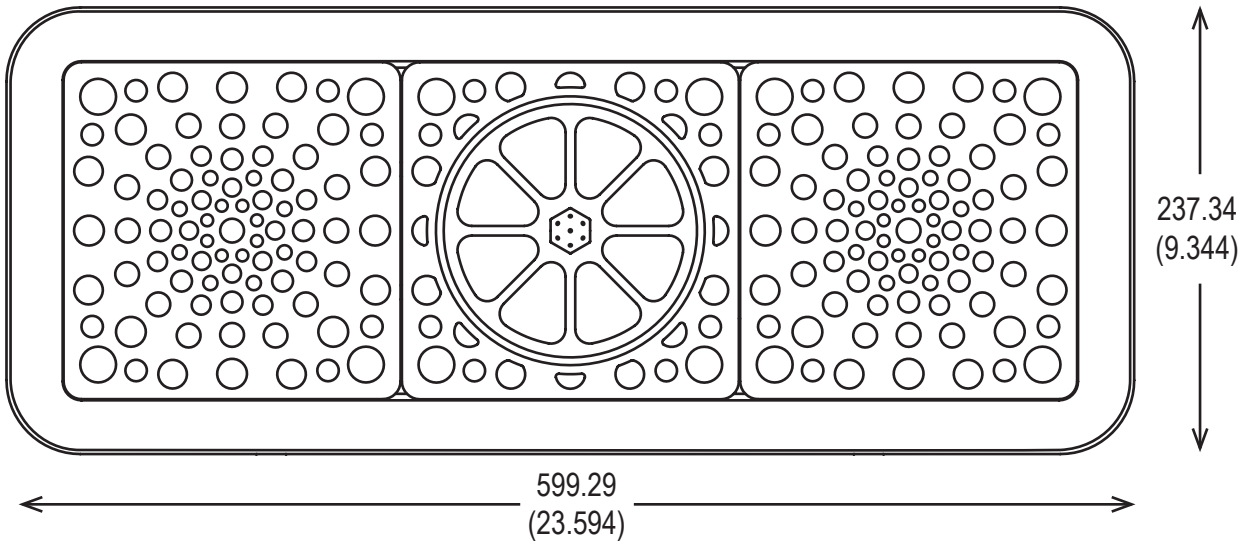

Standard Inclusions

- 1 x Sink.
- 1 x 3ft Clear drain hose.
- 1 x Spray mechanism.
- 1 x Actuator plate.
- 1 x 3ft 3/8 inch poly inlet hose.
- 1 x 3/8 inch John Guest inlet adapter .
- 1 x 3/8 inch John Guest elbow.
- 4 x Mounting clips.
- 1 x Hose clamp.

Product Specifications & Features

- All surfaces are sloped to drain.
- 304 Stainless steel construction.
- Brushed finish sink body and polished rinser mechanism
- No sharp edges, corners are rounded for safety.
- Secure mounting with 4 mounting clips.
- For use with water temperature below 86F.
- Removable drain grate design makes cleaning easy.
- NSF certified.